LIMITLESS Neon 12x12 Mono Horizontal

The LIMITLESS NEON is a versatile flexible lighting solution, utilizing advanced Flexible Printed Circuit (FPC) technology. Encased in durable polyurethane, it offers exceptional waterproofing, UV resistance, and resistance to solvents and salt water, ensuring long-lasting performance in harsh outdoor environments.

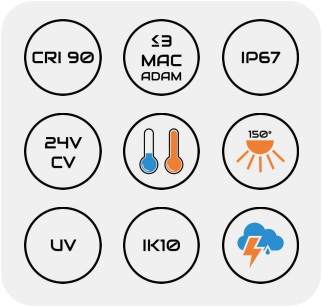

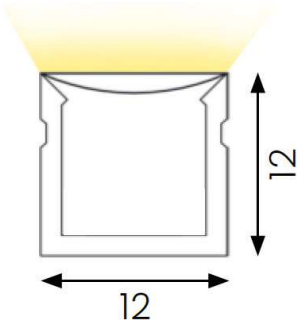

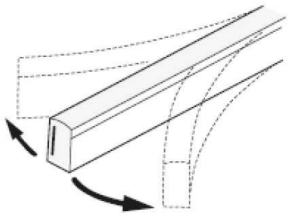

Product Final Code | Select a component for each column for final configuration

Product ID	+	Wattage	+	.90.IP67	+	CTT
LH12-NEON		5W | 5W/m 25W/Reel				24K | 2400K
						27K | 2700K
		10W | 10W/m 50W/Reel				30K | 3000K
						40K | 4000K
						50K | 5000K

Configuration Example | LH12-NEON5W.90.IP67.24K

Technical Data

Application	Surface mounted or Recessed
Dimensions	12 x 12 x 5000 mm
Cutting	Every 100 mm
Fitting Life	L90B10 (Ta,25°C) Reported TM-21 L70 Lifetime: > 54.000h
Operating Temperature	- 20°C / + 45 °C

Specification Product

Light Distribution	Diffused 150°
CRI	> 90
SDCM	< 3
Wattage	5 or 10 Watt/m
Voltage	24 Volt DC
Class	III

Lumen Data

CTT	5W/m - 25W/Reel Delivered lm/m	10W/m - 50W/Reel Delivered lm/m
2400K	263	525
2700K	273	545
3000K	290	580
4000K	305	610
5000K	313	625

Light Distribution

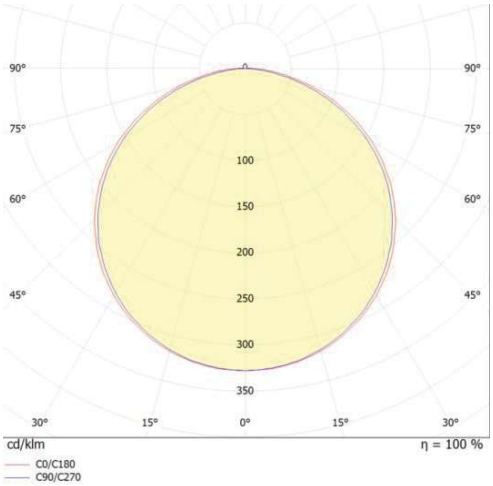

Drivers

D001



On/Off
75 Watt

D004



On/Off
150 Watt

D048



DALI
240 Watt
(max)

Accessories

Kit aluminium profile U



Section:
15 x 14 mm
L-AL039 | L = 1000
L-AL042 | L = 2000

Kit 10 nos aluminium porfile U



Section:
15 x 14 mm
L-AL040 | L = 30

Kit aluminium porfile U



Section:
15 x 28 mm
L-AL051 | L = 1000
L-AL052 | L = 2000

Kit aluminium porfile frame



Section:
23 x 14 mm
L-AL049 | L = 1000
L-AL050 | L = 2000

Kit aluminium porfile frame

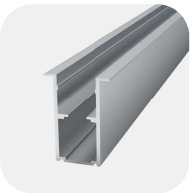

Section:
23 x 28 mm
L-AL053 | L = 1000
L-AL054 | L = 2000