Tools Required



! Before starting, switch OFF the power supply.

Installation must be carried out by qualified technical personnel.
This guide applies only to the products listed below.

ARGO Series - Projector

ARGO 1

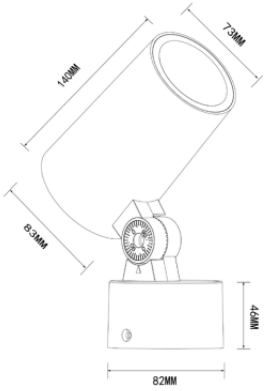

ARGO 1 | 12 Watt

ARGO 2

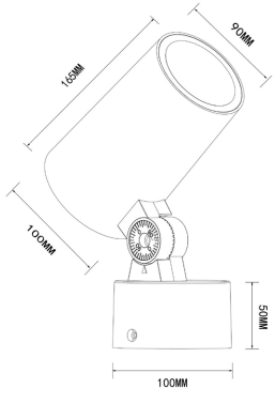

ARGO 2 | 20 Watt

ARGO 3

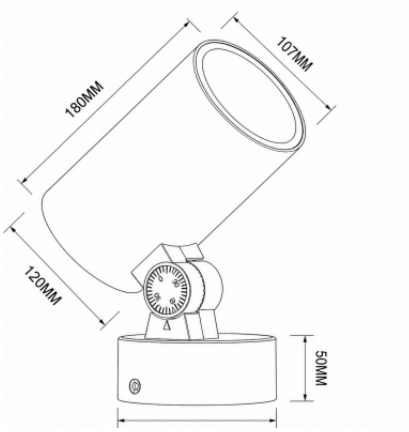

ARGO 3 | 30 Watt

220 V AC | 50-60 Hz | IP67 | Built-in driver

Standard: ON/OFF. TRIAC or DALI optional. RGBW on request.
Check the product label and ordered control version before connection.

Round base included: L-AGBR1 / L-AGBR2 / L-AGBR3.
Optional spike: L-AGSP1 / L-AGSP2 / L-AGSP3.
Use only the accessory specified for the corresponding ARGO model.

Drawings reproduced from the ARGO datasheets; not drilling templates. ARGO 1 diameter information differs between its heading, drawing and table and requires confirmation.

Operations

1 Secure the round base or selected mounting accessory using the approved fixing instructions.

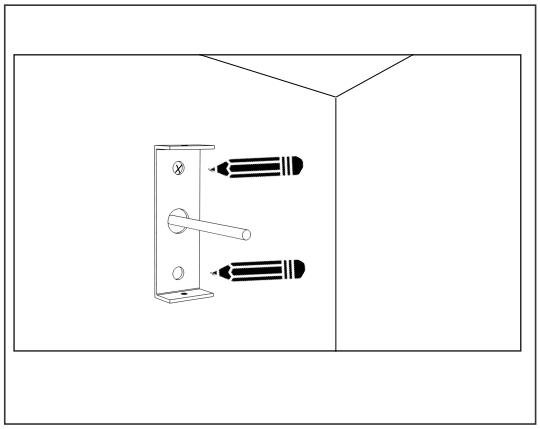

Fixings and torque: confirm before installation.

2 Set the projector direction and lock the aiming joint using the approved adjustment procedure.

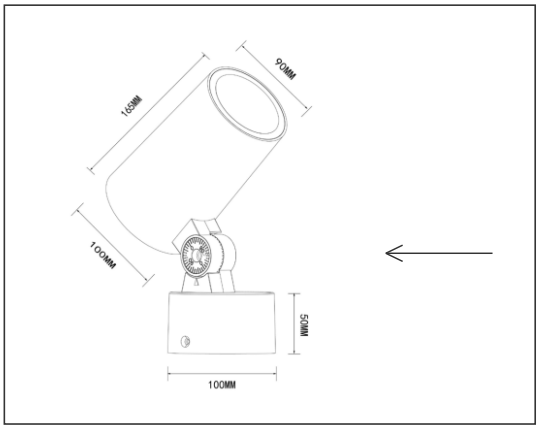

Aiming range and locking torque: confirm.

3 Connect the supplied version according to its approved wiring diagram. Maintain the specified IP protection.

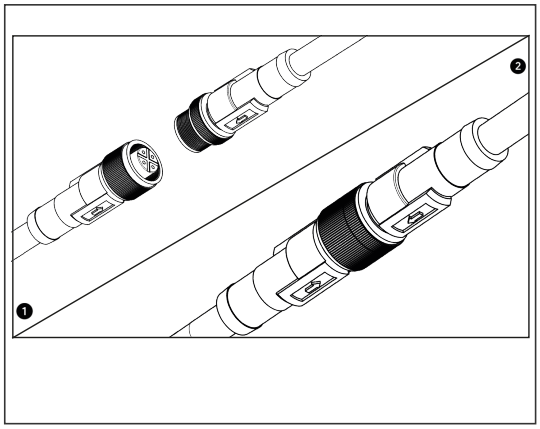

Overview only - not a wiring diagram.

4 Check mounting, sealing and electrical connections. After satisfactory checks, switch ON the power supply.

Before energising

- ☐ Mounting secure
- ☐ Seals and cable checked
- ☐ Electrical checks complete

POWER ON

Commission the supplied control version.

Technical confirmation before release

Confirm mounting hardware, fixing centres, tightening torques, aiming limits, protection class, cable and terminal details, and connection sealing. The ARGO datasheets do not specify an IP68 connector or a wiring pinout. TRIAC, DALI and RGBW versions require their own approved connection and control instructions.

Sources: ARGO 1/2/3 datasheets (April 2026). Layout reference: GeneralInstallation_TAP (August 2025).

REVIEW DRAFT | Fixing and wiring details require technical approval